NOTE: FOR MORE DETAILS SEE YOUR V.P.CUSTOMER SERVICE REP.

REVISIONS			
REV.	DESCRIPTION	DATE	APPROVED
A	INITIAL RELEASE	08-04-98	
B	CO 039 Drafting Update	05-08-06	Rick C.

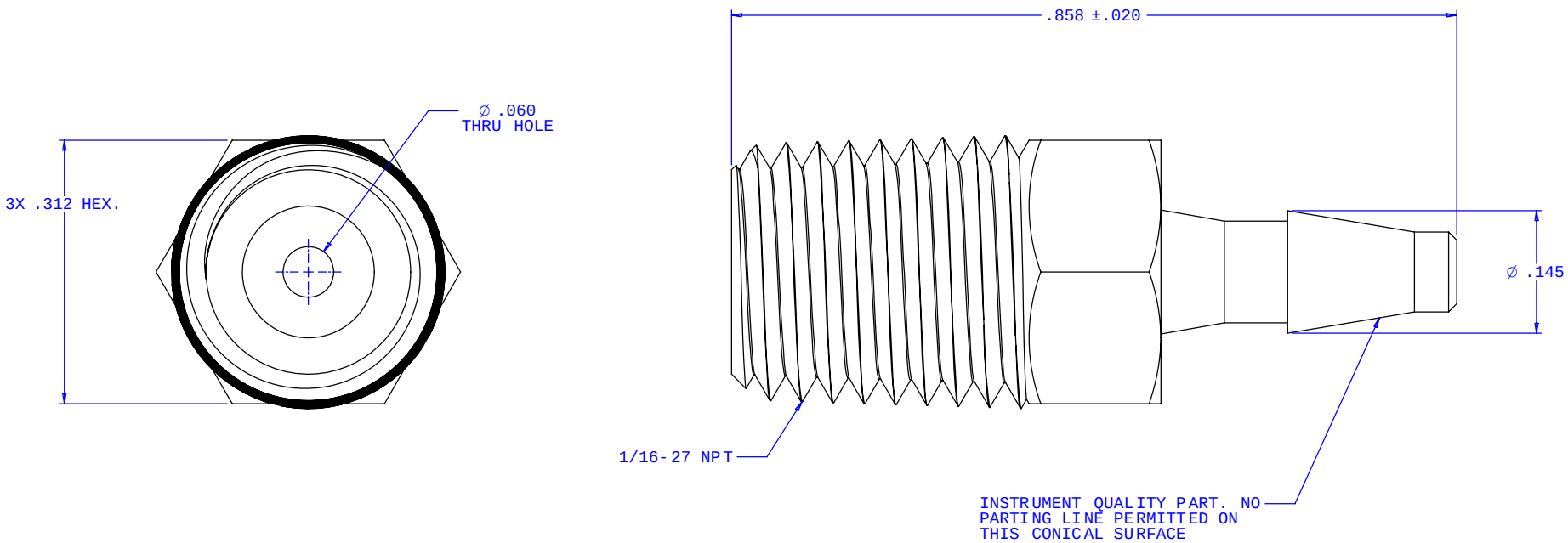

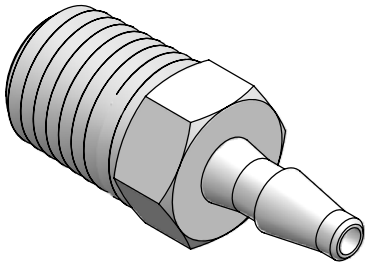

UNLESS OTHERWISE SPECIFIED
DIMENSIONS ARE IN INCHES
TOLERANCES ARE:

FRACTIONS	DECIMALS	ANGULAR
±	.XX ±.01	±1°
	.XXX ±.005	
	.XXXX ±.001	

DO NOT SCALE DRAWING

DRAWN BY: Frank Lombardi DATE: 02-11-06

Engineer Manager: Rick Cairns

VALUE PLASTICS, INC.

PART NUMBER: 1620

DESCRIPTION: 1/16-27 NPT Thread with 5/16" Hex to Classic Series Barb, 3/32" (2.25 mm) ID Tubing

SIZE:	SCALE:	DRAWING NUMBER:	REV.
B	NTS	1008264	B

© 2006 VALUE PLASTICS, INC.

SHEET: 1 OF 1

FOR REFERENCE ONLY